Front view and mounting

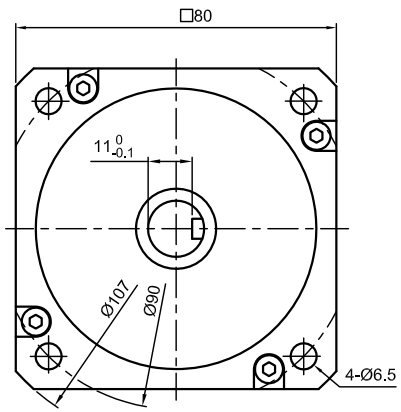

Side view

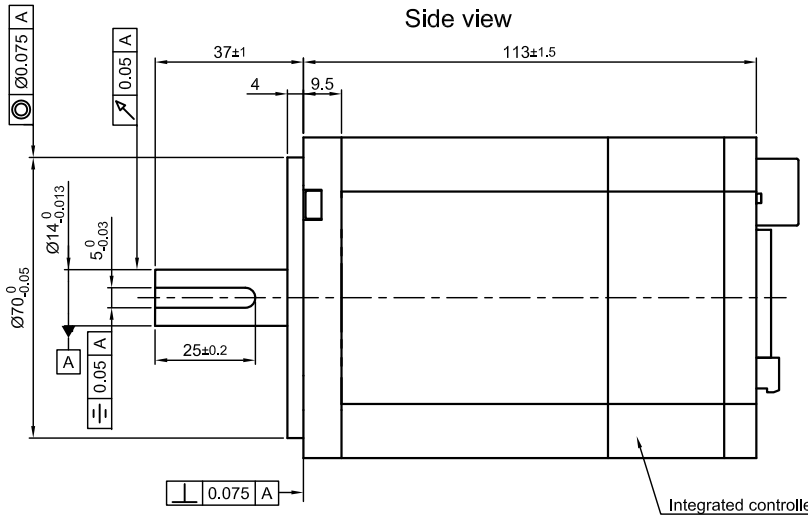

Rear view

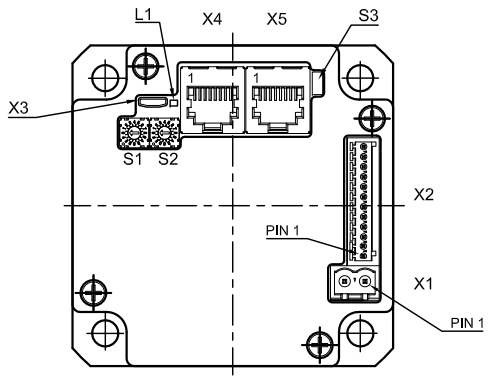

☞ glue the front bearing with Loctite326

X1 Power Connector	
Pin No.	Function
1	+UB (12–48V)
2	GND

X4/X5 CANopen IN/OUT	
Pin No.	Function
1	CAN_H
2	CAN_L
3	CAN_GND
4	n.c.
5	n.c.
6	CAN_SHLD
7	GND
8	+UB Logic (24V)

SPECIFICATION / CONNECTION	DELTA
NO. OF POL./PHASE	8/3
VOLTAGE RATED (VDC)	48
CURRENT RATED/NO LOAD/PEAK (A)	14/0.7/40
RESISTANCE/LINE-LINE(Ohms) @20°C	0.1±10%
INDUCTANCE/LINE-LINE (mH) @1KHz	0.6±20%
TORQUE RATED/PEAK (Nm)	1.7/5
TORQUE CONSTANT (Nm/A)	0.12
SPEED RATED/NO LOAD (RPM)	3000/4250±10%
ROTOR INERTIA (g.cm^2)	1020
WEIGHT (Kg)	1.35

INPUT CONNECTION

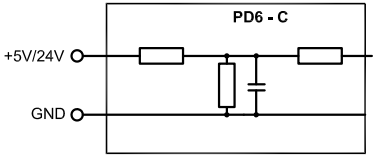

OUTPUT CONNECTION

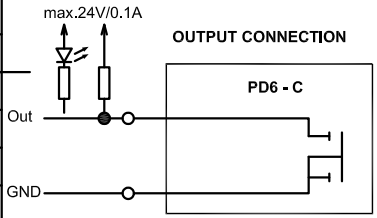

PERMISSIBLE RADIAL+AXIAL FORCE

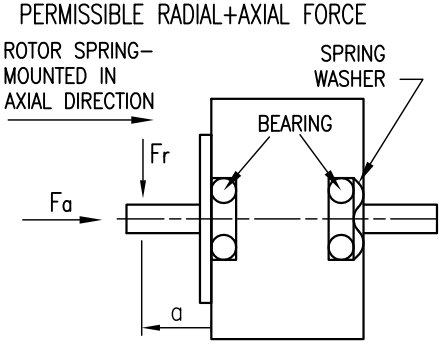

OVERTEMPERATURE PROTECTION (ELECTRONICS): 75°C	AXIAL-FORCE Fa (N)	Fa=45
AMBIENT TEMPERATURE -10°~ 50°C [14°F ~ 122°F]	DISTANCE a (mm)	20
INSULATION RESISTANCE 100 MOhm (UNDER NORMAL TEMPERATURE AND HUMIDITY)	RADIAL-FORCE Fr (N)	115
INSULATION (MOTOR) CLASS B 130° [266°F]		AXIAL
DIELECTRIC STRENGTH 500VAC FOR 1 MIN. (BETWEEN THE MOTOR COILS AND THE MOTOR CASE)	SHAFT PLAY (mm)	☞ 0.2 max.
AMBIENT HUMIDITY MAX. 85% (NO CONDENSATION)	AT LOAD MAX: (N)	☞ 250

X2 IO Connector		
Pin No.	Function	
1	+10V VOLTAGE SUPPLY (max. 200mA)	
2	Input 1/ Enable (5V/24V)	-Input1/ -Enable*
3	Input 2/ Direction (5V/24V)	Input1/ Enable*
4	Input 3/ Clock (5V/24V)	-Input2/ -Direction*
5	Input 4 (5V/24V)	Input2/ Direction*
6	Input 5 (5V/24V)	-Input3/ -Clock*
7	Input 6 (5V/24V)	Input3/ Clock*
8	Analog Input1 (0-10V/0-20mA)	
9	Analog Input2 (0-10V)	
10	Output1 (open drain) A	
11	Output2 (open drain) A	
12	GND	

*configured as differential input

X3 Micro-USB

REV	DESCRIPTION	DATE	DRN
A	–	22.03.16	A.S.

Nanotec® PLUG & DRIVE

Surface specification DIN ISO 1302 | General tolerances DIN ISO 2768- cH | Work piece edge DIN ISO 13715

APVD	X.W.	03.11.15
CHKD		
DRN	A.S.	03.11.15
SIGNATURE		DATE

PLUG&DRIVE MOTOR

DWG.NO PD6-CB80M048030-E-09